PTZ series | Indoor PTZ Camera

IPS5304A / 5308A

30X Day & Night 30fps Full HD PTZ Dome IP Camera

- Pan-tilt-zoom capabilities
- 30X optical zoom
- IR cut filter for day/night operations
- 1080p HD resolution
- Wide Dynamic Range up to 90dB

Dimensions: Ø 155mm x 245mm

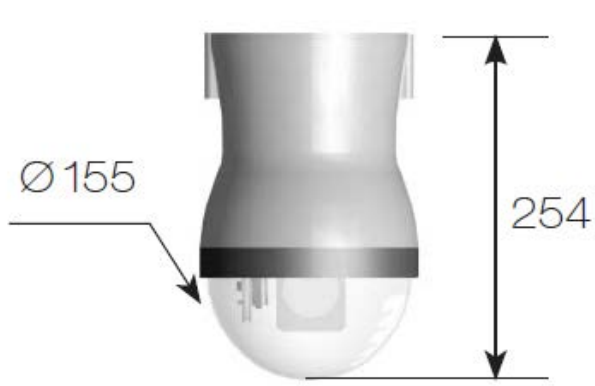

The IPS5304A / IPS5308A is 1080P Full HD PTZ Dome IP Camera. The high-speed dome is capable of streaming HD video at up to 30 FPS. Featuring LILIN's Wide Dynamic Range (WDR) feature, the IPS5304A / IPS5308A captures highlights and shadows simultaneously, eliminating pixilation and smear. Combine this with 3D Noise Reduction technology and adaptive tone reproduction and the contrast of images in bright or dark areas is dramatically improved. Capable of making 360° continuous rotations with a speed range of 0.15°～360° per second, users can accurately position the camera to identify specific targets. The 30x optical zoom and 16x digital zoom capacity gives the IPS5304A / IPS5308A an impressive range. With a focal length of 4.3mm (WIDE)～129.0mm (TELE), IPS5304A / IPS5308A is ideal for numerous applications.

Diagram of mounting holes (unit in mm):

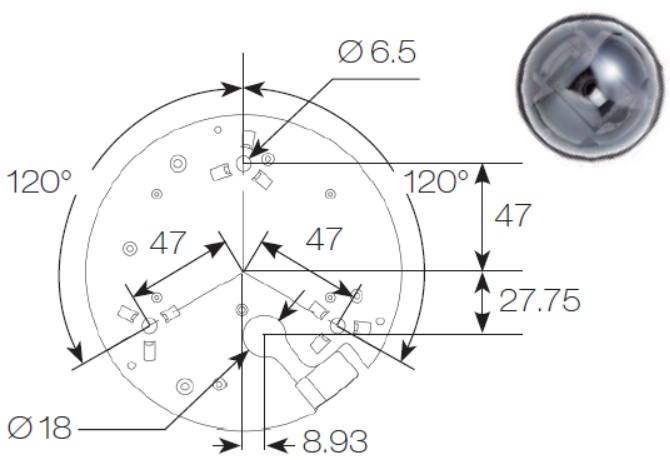

Product Features

PTZ Control Function

Pan-Tilt-Zoom (PTZ) cameras are able to perform remote directional and zoom control. Capable of making 360° continuous rotations and 102° tilt angle, the cameras field of view can be quickly zoomed and repositioned as needed to identify specific targets

Back Light Compensation

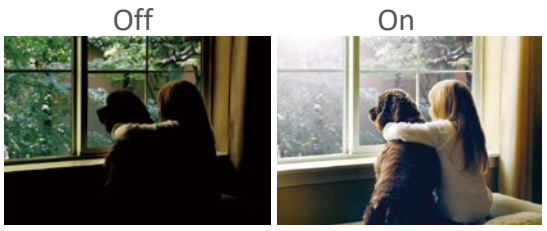

Back Light Compensation (BLC) adjusts the exposure of the entire image to properly expose the subject in the foreground. No matter if the main object is moving toward left, right, upper, lower, or any location in the screen, BLC provides perfect exposure for an object in front of strong back light

Video Security App

Available on Android and iOS – **LILINViewer** app provides security alarm push notification, real-time live viewing, and remote video playback

Day and Night Operations via Removal of the IR-cut filter

IPS5304A / 5308A camera was designed using a mechanical IR cut filter for increased IR sensitivity resulting in improved night time images. The removable IR-cut filter allows day and night operations even in the low lux condition providing outstanding vision

ONVIF-compliant

Open Network Video Interface Forum (ONVIF) is a standard for physical IP based security products. IPS5304A / 5308A PTZ camera is ONVIF Profile S conformant

Motion Detection

Detect motion and capture the event. Motion in the selected area will provoke an alert

30X Optical Zoom

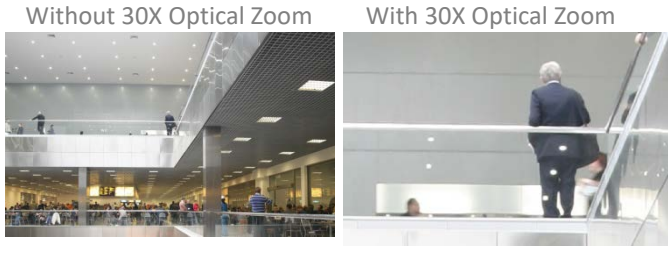

Remote pan/tilt/zoom operations with 30X optical lens makes it possible to zoom in on distant object with absolute clarity

Alarm Detection

Alarm Detection is designed to provide the electronic detection of intruders

SD Cards in Sync with NAV Software

IPS5304A / 5308A camera with built-in Micro SD/SDHC/SDXC card slots can provide redundant video viewing and recording. You can synchronise an SD card with LILIN VMS (Video Management Software) – Navigator (NAV)

Noise Reduction

Remove noise from a signal. Suppressing noise in an image in low light conditions and able to retain quality videos at the same time

Two-way Audio Support

With 2-way audio communication, you can project your voice through the camera's speaker instead of hearing what's going on (1-way audio)

Ceiling Mount

The IPS5304A / 5308A can easily be mounted to any ceiling

Technical Specifications

IPS5304A / 5308A

30X Day&Night 1080P Full HD PTZ Dome IP Camera

Video performance & Power		
Model#	IPS5304A	IPS5308A
Low Light Mode (Colour)	0.5 lux (1/30 sec, F1.6(Wide), 50IRE, AGC-Gain: 30dB ICR-OFF) 0.1 lux (1/30 sec, F1.6(Wide), 50IRE, AGC-Gain: 30dB ICR-OFF) 0.2 lux (1/8 sec, F1.6(Wide), 50IRE, AGC-Gain: 30dB ICR-OFF) 0.01 lux (1/8 sec, F1.6(Wide), 50IRE, AGC-Gain: 30dB ICR-OFF)	
Power consumption	AC24V, 15.5W	AC100 – 240V, 16W
Power supply	AC24V ±10%	AC100 – 240V ±10%

Sensor	
Sensor type	1/2.8" CMOS image sensor
Total number of pixel	1944 (H) × 1224 (V) = 2,379,456 (pixels)

Certifications	
CE	Yes, EMI CLASS A
FCC	Yes, EMI CLASS A

Lens		
Zoom ratio	30X optical zoom	
Focal length	4.3mm (WIDE) - 129mm (TELE)	
Minimum aperture ratio	1:1.6 (WIDE)-5.0 (TELE)	
Minimum object distance	10cm (WIDE end), 1.5m (TELE end)	
Iris range	F1.6 - 32, close	F1.6 - close
Angle field of view	(H)64.45°(W) – 2.41°(T) (V)39.27°(W) – 1.36°(T)	

Pan & Tilt	
Panning range	360° Endless
Panning mode	Manual, Auto, Manual Position, Sequential Position
Panning speed	Manual approx. 0.15°/s-120°/s 8 Steps, Preset approx. 1°/s-255°/s, Alarm Trigger Speed 360°/s
Tilting range	-6° - +96°
Tilting mode	Manual, Auto, Manual Position, Sequential Position
Tilting speed	Manual approx. 0.15°/s-120°/s 8 Steps, Preset approx. 1°/s-255°/s, Alarm Trigger Speed 360°/s

Environmental	
Ambient operating temperature	-10°C～+ 50°C (14°F～122°F)
Operating humidity	0%～90%

PC requirement	
CPU	Intel® Core™ i3 or higher grade
OS	Windows 7 or above
RAM	4GB or above, Dedicated Graphics Card
Web browser	Microsoft® Internet Explorer® 9 or above

Mechanical	
Dimensions (H x D)	245mm x 155mm
Weight	2300g approx.

Main functions	
Control function	Pan and Tilt / Zoom and Focus / Iris and ICR / 128 Preset Position / Home Position
Digital zoom ratio	16X
Zoom speed	0 - 7 Selectable[Fast : Approx. 6.0 Second (Tele to Wide) in Manual Mode]
Focus speed	0 ~ 7 Selectable [Fast : Approx. 6.0 Second (Far to Near) in Manual Mode]
Focus	Auto (Continue / Interval / Zoom Trigger / One Push), Manual Focus
Iris	DC IRIS , ALC (Adjustable Output Target Level) / Manual

Input / output	
Video output	CVBS 1.0 Vp-p / 75 Ω BNC
Alarm input / output	6 Input (TTL 5Vdc) , 2 Output (0.5A 120Vac,1A 24Vac)

Video sreaming	
Video Streaming	RTP/HTTP, RTP/TCP, RTP/UDP, Multicast 4 configurable streams in H.264 and Motion JPEG, configurable frame rate and bandwidth
Bitrate	128 Kbps to 8 Mbps Frame rate and bitrate controllable on-the-fly VBR / CBR / GOP supported

Video resolution (H x V)	
1080P	1920 x 1080
720P	1280 x 720
D1	720 x 480, 720 x 576
CIF	352 X 240
Frame rate	H.264: up to 30FPS @ 1920 x 1080 Motion JPEG: up to 30FPS @ 720 x 480

Video functions		
Day/Night (IR-cut filter)	Colour (Day), Monochrome (Night), Auto	
Scanning system	Progressive scan	
White balance	ATW/Indoor(3200K)/Outdoor (5800K) /Manual (1800K ~10500K)	ATW / Indoor(5500K) / Outdoor(6500K) / Manual(2700K – 7500K)
Shutter	Auto / manual(1/1 to 1/100,000)	
Exposure mode	Auto / Manual	
Back light compensation	Off / BLC / WDR	
Digital noise reduction	Off / On (2D, 3D)	
Dynamic privacy zone mask	Off / On (up to 16 areas)	
Auto mode	Off / AUTO / SEQ / TOUR	
Web PTZ control	Pan, tilt, zoom-in / zoom-out, absolute position, and mouse click function	
Schedule setting	Off / Auto Mode / Preset position	
Digital image stabilization	Off / On	
Auto gain control	50dB Variable Gain	
Other functions	Contrast, Sharpness, Mirror, Flip, Defog, DIS, Digital Zoom(x16)	Bright, Contrast, Sharpness, Saturation, Mirror, Flip, Defog, DIS, Digital Zoom(x12)

Integration	
Mobile application	Integrated to LILIN mobile app (LILINViewer) iPhone, iPad, Android support
Video management	ONVIF Profile S LILIN Navigator Enterprise 1.0 and 2.0 Third party VMS through LILIN HTTP API
SD card recording	Support Micro SD/SDHC/SDXC card for circular recording (card is not included)
Firmware	Firmware upgrade via HTTP Firmware available to download at meritlilin.com
IVS Basic 1.0	Motion Detection, Audio detection
Alarm event triggers	Alarm / motion / audio / Network lost detection
Alarm event actions	FTP, HTTP post, SD card
Alarm weighted mode	Support

Network	
Ethernet	10Mbps / 100Mbps, RJ-45
Connectivity	ONVIF Profile S
User accounts	10 simultaneous users
PTZ preset scheduling	Yes, via Web interface
OSD	Text overlay for date, time, and camera name, and PTZ position
CPU, Memory	Embedded SoC ARM11, 528MHz, 256MB DDR2, 256MB flash memory
Video display	LILIN Universal ActiveX & LILIN Java Applet
OS	Embedded Linux 2.6.32
2-way audio	G.711 u-law
Protocols	IPv4, IPv6, TCP, UDP, HTTP, SMTP, NTP, DDNS, UPnP, FTP, ARP, DHCP, PPPoE, DNS, Telnet, RTSP, RTCP, ONVIF profile S, SNMP, Bonjour
IP Filter	Yes
Multi IP address	Yes

Network security	
Max number of online users	10 user accounts available
Access	Multiple user access levels with password protection
Encryption	Base 64 HTTP encryption
Authentication	Digest HTTP authentication, RTSP authentication

www.e-rong.co.th
E-mail : sales@e-rong.co.th
Line official ID : @e-rongconsultants

E-Rong Consultants Co., Ltd.
THINK OF TECHNOLOGY THINK OF E-RONG

Thailand : E-Rong Consultants Co.,Ltd.
Tel : 02-664-6588 I E-mail : sales@e-rong.co.th