P2 Series | IP Dome Camera

P2R3052AE2 5MP Day & Night Fixed IR Dome IP Camera

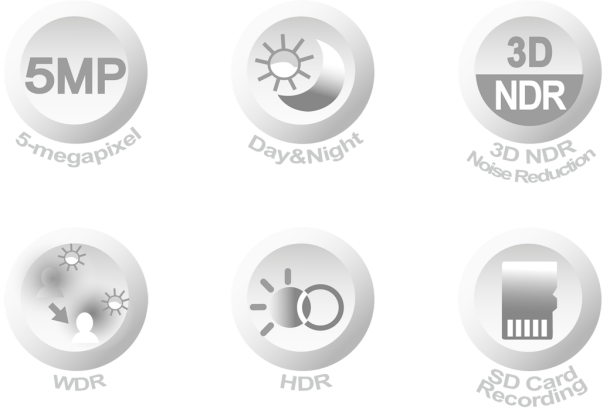

- 5 megapixel CMOS image sensor
- 5MP H.265/HEVC and H.264/AVC high-performance video compression
- Simultaneous streaming of H.265 and H.264 encoded streams
- Smart H.264/H.265 supported
- 3D noise reduction (MCTF)
- 2D WDR function
- HDR function up to 100dB
- Digital PTZ supported
- IVS supported
- Tampering / Audio / Alarm / Motion / Network lost detection event function
- SMART event
- High efficiency IR LED, radiant distance up to 30m
- Day & Night (IR cut removable)
- Built-in highly sensitive microphone
- 2-way audio supported
- Digital I/O : 1 in, 1 out
- 3-Axis construction
- ONVIF Profile S and Profile T supported

Dimensions
Ø110 × 89(H) mm

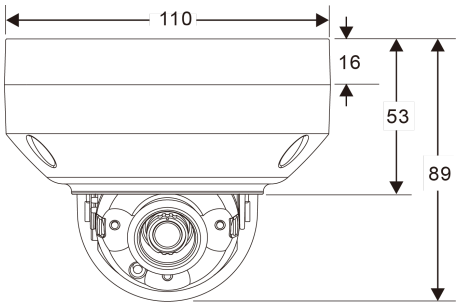

Diagram of mounting holes:(unit in mm)

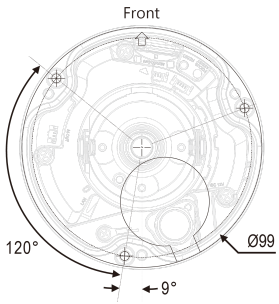

Product Features

P2R3052AE2

Day and Night Operations via Removal of the IR-cut filter

P2R3052AE2 camera was designed using a mechanical IR cut filter for increased IR sensitivity resulting in improved night time images. The removable IR-cut filter allows day and night operations even in the low lux condition providing outstanding vision

Sense Up+

Deliver outstanding video outputs in poor light conditions without experiencing motion blur. You can see video clearly even during nighttime without sufficient lighting support

3D Noise Reduction

Remove noise from a signal. Suppressing noise in an image in low light conditions and able to retain quality videos at the same time

Wide Dynamic Range (WDR)

Wide Dynamic Range (WDR) displays details of both the brightest and darkest areas. WDR can extend image visibility under high contrast lighting scenes and improve image quality

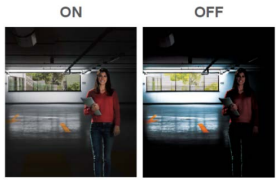

High Dynamic Range

An High Dynamic Range (HDR) image is made by taking 3 frames of the same scene and each at different shutter speeds to display details of both the darkest and brightest areas. HDR can extend image visibility under high contrast lighting scenes and improve image quality

Privacy Masking

Privacy Masking is a feature used to protect personal privacy by concealing private areas in the camera's field of view. Doorways and house windows for example are not subject to surveillance

Video Security App

Available on Android and iOS – LILINViewer app provides security alarm push notification, real-time live viewing, and remote video playback

SD Cards in Sync with NAV Software

P2R3052AE2 camera with built-in Micro SD/SDHC/SDXC card slots can provide redundant video viewing and recording. You can synchronize an SD card with LILIN VMS (Video Management Software) – Navigator (NAV)

Alarm Detection

Alarm Detection is designed to provide the electronic detection of intruders

Audio Detection

With Audio Detection technology, an alarm is triggered based on ambient sound conditions as the threshold

Technical Specifications

P2R3052AE2

5MP Day & Night Fixed IR Dome IP Camera

Video Performance	
Model	P2R3052AE2
Min. Illumination	Color : 0.01 Lux at F1.6 ; B/W : 0.004 Lux at F1.6 ; 0 Lux with IR LED ON

Power and Environment	
Starting Temperature	0°C – +50°C (32°F – 122°F)
Operating Temperature	-20°C – +50°C (-4°F – 122°F)
Storage Temperature	-25°C – +60°C (-13°F – 140°F)
Humidity	0% – 90% RH
Power Supply	DC12V ±10% / PoE (IEEE 802.3af compliant)
Power Consumption	DC12V, 6W / PoE, 7.5W

Lens / Night Vision (Infrared LED)	
Focal Length	2.8mm
Iris	F1.6
Iris Control	Fixed IRIS
Angle of View	92.8° (H) 68.8° (V) 116.5° (D)
Peak Wavelength	850nm
Beam Spread	60°
Radiant Distance	30M

Sensor	
Pick Up Element	1/2.8" CMOS image sensor
Effective Pixels	2616 (H) × 1964 (V) = 5,137,824 (Pixels)

Certifications	
CE	Yes, EMI CLASS B
FCC	Yes, EMI CLASS B

PC Requirements	
CPU	Intel® Core™ i7 or higher grade
OS	Windows 7 or above
RAM	8GB or above, Dedicated Graphics Card
Web Browser	Microsoft® Internet Explorer® 9 or above

Mechanical	
Dimension	Ø110 × 89(H) mm
Weight	365g
Casing Material	Plastic

Input / Output	
Audio Input / Output	Mono, 1.98 Vp-p , 2.2KΩ , Terminal Block
Audio	Two-way Audio, G.711 u-law / PCM / AAC, SIP, Built-in Microphone
Alarm Input / Output	Digital 1 input (TTL, +3 – 5VDC) / 1 Output (MOS Relay contact N.O., Load.max. 40VDC,450mW/300mA,450mW), Terminal block

Video Streaming	
Video Compression	H.265/HEVC main profile, H.264 main and high profile , Motion JPEG
Video Streaming	RTP/HTTP, RTP/TCP, RTP/UDP, Multicast 4 configurable streams in H.265 and H.264 and Motion JPEG, configurable frame rate and bandwidth
Number of Streams	4
Video Bitrate	128Kbps – 12Mbps; Frame rate and bit rate controllable on-the-fly; VBR / CBR / GOP supported, Fixed bitrate, Smart H.264/H.265

Network Security	
Encryption	Base64 HTTP encryption, HTTPS encryption, DDNS via HTTPS
Authentication	Digest HTTP authentication, RTSP authentication, TLS, 802.1x, DDNS via HTTPS
Address Filter	IP address filter, MAC address filter
Access	Multiple user access levels with password protection
User accounts	10 user accounts available
Multi IP Address	Yes

Video Resolutions (H x V)	
Resolution	5MP(2592 × 1944), 4MP(2304 × 1728), 3.1MP(2048 × 1536), 3MP(2304 × 1296), 2MP(1920 × 1080), 1.3MP(1280 × 960), 1MP(1280 × 720), D1(720 × 480, 720 × 576), VGA(640 × 480), CIF(352 × 240)
Maximum Frame Rate	Normal mode: up to 25 fps @ 2592 × 1944 HDR mode: up to 25 fps @ 2592 × 1944

Video Functions	
Scanning System	Progressive Scan
Infrared Cut Filter	Auto / Day (Color) / Night (Mono) / Schedule
White Balance	ATW-NARROW / ATW-WIDE / AWC(MANUAL)
Back Light Compensation	Yes
Electrical Shutter	1/30(1/25)s – 1/30000s
Sense Up	Off / x2 / x4 / x8 / x16
Sense Up+	Yes
Auto Gain Control	60 dB Variable Gain
S/N Ratio	More than 50dB (AGC off)
3D Noise Reduction	Off / 1 – 32 Selectable
2D WDR	Off / Auto / x2 / x3 / x4 (by normal mode) Support Onvif
High Dynamic Range	Up to 100dB (by HDR mode, 2 shutter line interleave)
Privacy Masking	Off / On (4 zones)
Image Effects	Brightness, Contrast, Hue, Saturation, Sharpness, Mirror, Flip, Rotation, Overexposure Reduction
EV (Exposure Value)	Adjustable
Lens distorsion correction (LDC)	Yes

Integration	
Mobile Application	Integrated to LILIN mobile app (LILIN Viewer) iPhone, iPad, Android support
Video Management	ONVIF Profile S / ONVIF Profile T / IVS events, LILIN Navigator Enterprise 2.0 support, Third party VMS through LILIN HTTP API
SD Card Recording	Support (128GB) Micro SD/SDHC/SDXC card for circular recording (card is not included)
Maintenance	Firmware update via HTTP and IP Scan; Firmware available at website
IVS Basic 1.0	Motion Detection, Tampering Detection, Advanced Motion Detection, Traffic Light Detection, Tripwire Detection, Object Counting
Event Triggers	Motion / Tamper / Audio / Alarm / Network lost detection / SmartEvent
Event actions	FTP / SMTP / HTTP post / SD card / SAMBA / Alarm / SNMP Trap / Push Service notification
Languages	English, Traditional Chinese, Simplified Chinese, Spanish, Italian, Turkish, Russian, Korean, French, Arabic, Hungarian, Japanese

Network	
Ethernet	10/100 Mbps Base-T (Tx), RJ-45
ePTZ & Digital Zoom	Yes, ROI (Region of Interest)
OSD	Position configurable text overlay for date, time, camera ID, event status and watermark with customizable user demand data
CPU, Memory	Embedded SoC ARM Cortex-A9, 816MHz, 512MB DDR3L, 256MB flash memory
OS	Embedded Linux 3.10
Network Protocols	IPv4, IPv6, TCP, UDP, HTTP, HTTPS, SMTP, SIP, MQTT, QoS, SNMP V1/V2/V3, SNMP Trap and heart beat, NTP, DDNS, UPnP, FTP, ARP, DHCP, PPPoE, DNS, RTSP, RTCP, Telnet, ICMP, IGMP, ONVIF Profile S , ONVIF Profile T, SDDP, Bonjour , 802.1x, SSL/TLS
Max number of online users	10 simultaneous users
Video Display	LILIN Universal ActiveX , LILIN Java Applet
Watermark	BMP logo
Log	Event & operation log & IVS event log
Schedule	Support holiday list
Network Storage	NAS (Support SAMBA/CIFS)